UNIVERSITY OF CAMBRIDGE INTERNATIONAL EXAMINATIONS
General Certificate of Education
Advanced Subsidiary Level and Advanced Level

CANDIDATE NAME	
CENTRE NUMBER	
CANDIDATE NUMBER	

* 2 4 2 1 3 6 6 7 2 6 *

PHYSICS **9702/33**

Paper 31 Advanced Practical Skills 1 **October/November 2009**

2 hours

Candidates answer on the Question Paper.

Additional Materials: As listed in the Confidential Instructions.

READ THESE INSTRUCTIONS FIRST

Write your Centre number, candidate number and name on all the work you hand in.
Write in dark blue or black pen.
You may use a soft pencil for any diagrams, graphs or rough working.
Do not use staples, paper clips, highlighters, glue or correction fluid.
DO **NOT** WRITE IN ANY BARCODES.

Answer **both** questions.
You will be allowed to work with the apparatus for a maximum of one hour for each question.
You are expected to record all your observations as soon as these observations are made, and to plan the presentation of the records so that it is not necessary to make a fair copy of them. The working of the answers is to be handed in.
Additional answer paper and graph paper should be submitted only if it becomes necessary to do so.
You are reminded of the need for good English and clear presentation in your answers.

At the end of the examination, fasten all your work securely together.
All questions in this paper carry equal marks.

For Examiner's Use	
1	
2	
Total	

This document consists of **8** printed pages and **4** blank pages.

© UCLES 2009

BLANK PAGE

You may not need to use all of the materials provided.

For Examiner's Use

1 In this experiment, you will investigate the extension of one of the springs supporting a load as the load is varied.

The apparatus has been partly assembled.

Complete the assembly by suspending the mass hanger (with no masses on it) from the central loop, as shown in Fig. 1.1.

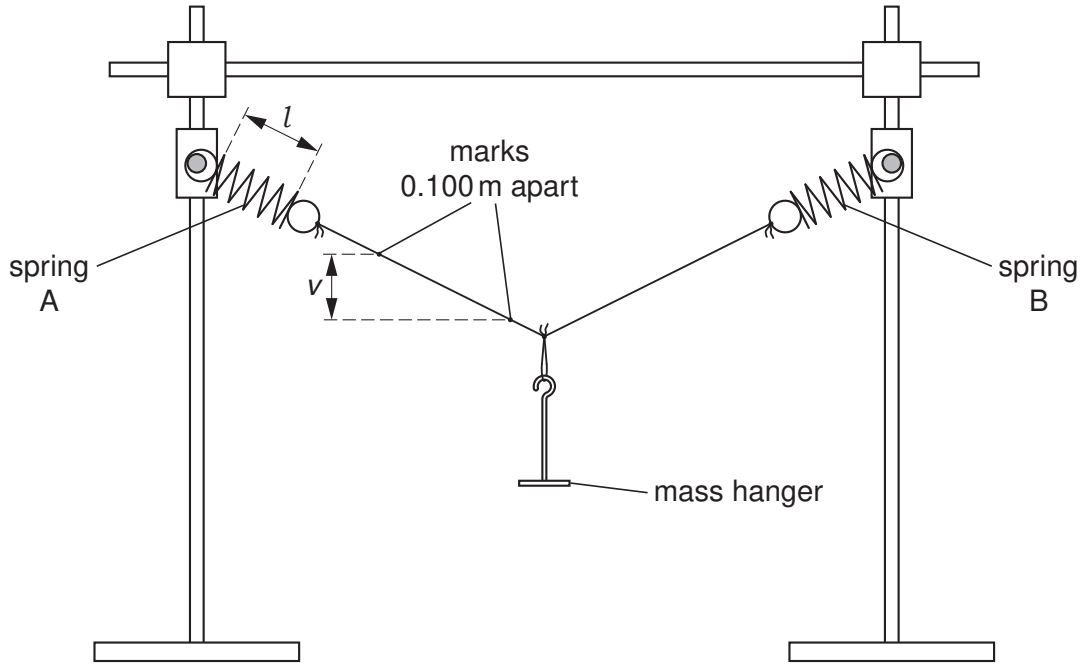

Fig. 1.1

Note that two marks 0.100 m apart have been made on the string.

(a) Record the suspended mass *M* (the mass of the mass hanger).

M = ... kg

(b) (i) Measure the length *l* of the coiled section of spring A, as shown in Fig. 1.1.

l = ... m

(ii) Hence calculate the extension *x* of the spring (the unloaded length is written on a card).

x = ... m

(c) Measure the heights of the marks above the bench and use these to find the vertical separation *v* of the marks (see Fig. 1.1).

Show your working.

v = ... m

© UCLES 2009

(d) Add more mass to the hanger and repeat **(a)**, **(b)** and **(c)** until you have six sets of readings for M, l, x and v.

Include values of $\frac{M}{v}$ in your table.

For Examiner's Use

(e) **(i)** Plot a graph of $\frac{M}{v}$ on the y-axis against x on the x-axis.

(ii) Draw the line of best fit.

(iii) Determine the gradient and y-intercept of the line of best fit.

gradient = ...

y-intercept = ...

© UCLES 2009

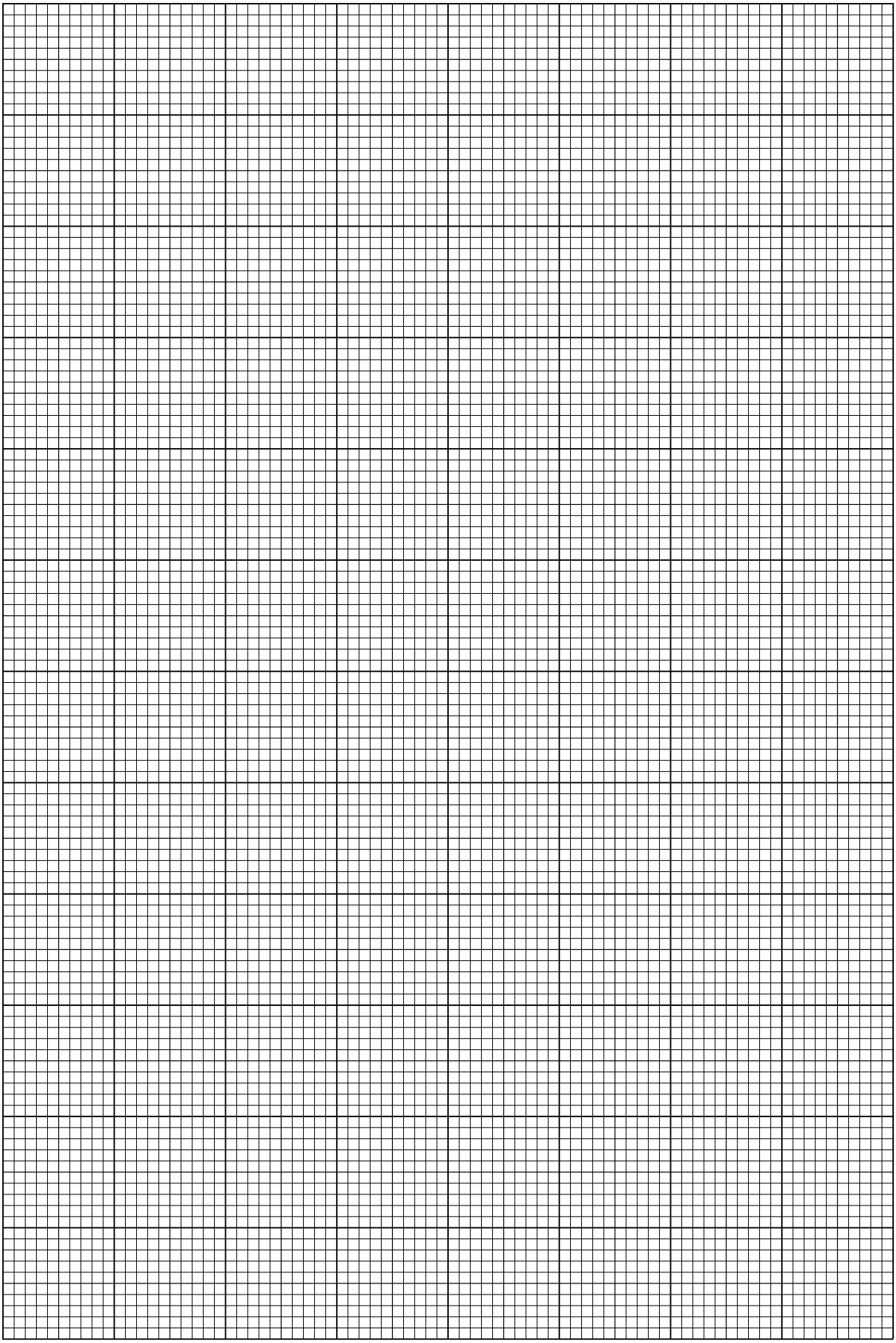

For Examiner's Use

(f) The quantities M, v and x are related by the equation

$$\frac{M}{v} = qkx + qC$$

where q is a constant, k is the spring constant (the value of k is written on a card) and C is the tension required for the initial separation of the spring's coils.

Using your answers from **(e)(iii)**, determine the value of C.

For Examiner's Use

C = ... N

BLANK PAGE

Please turn over for Question 2.

You may not need to use all of the materials provided.

For Examiner's Use

2 In this experiment, you will investigate how the frictional force between a wooden rod and nylon thread varies with the length of thread in contact with the rod.

(a) Use the vernier calipers to determine the diameter d of the wooden rod.

Show all your working.

d = ...

(b) Estimate the percentage uncertainty in d.

percentage uncertainty = ...

(c) Assemble the apparatus as shown in Fig. 2.1.

The 10 g mass is already attached to one end of the thread. Attach the 50 g mass hanger to the other end.

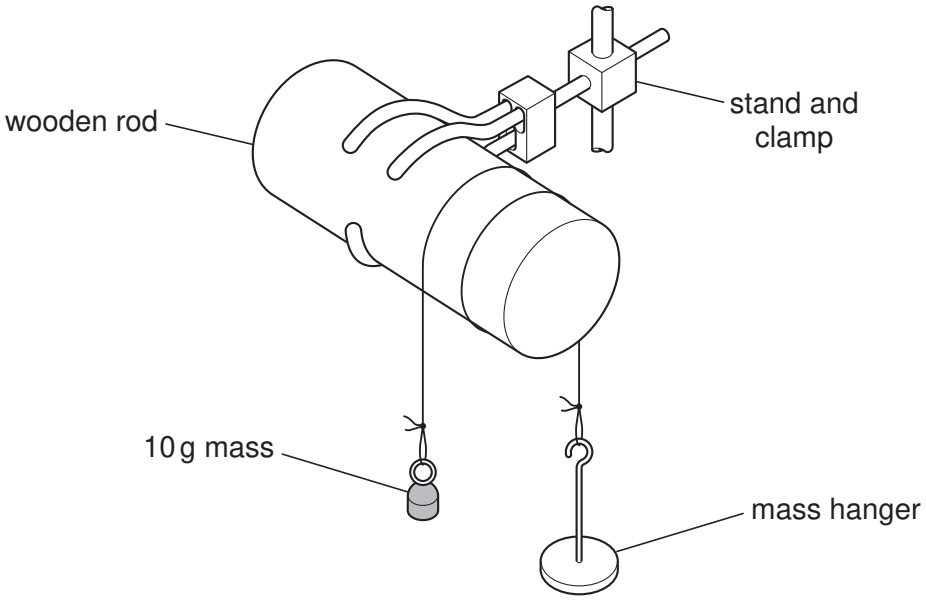

Fig. 2.1

The thread is wrapped 1.5 times around the rod.
The turns of thread must not touch each other.

(d) Use your value from **(a)** to calculate the length l of thread in contact with the rod. (Circumference of rod = πd).

Show all your working.

l = ...

(e) Add masses to the hanger until the hanger just starts to move down to the bench.

Record this mass m (including the mass of the hanger).

m = ... g

For Examiner's Use

(f) Remove the masses from the hanger and then wrap the thread one more time around the rod, so that it is now wrapped around the rod 2.5 times.

Repeat steps **(d)** and **(e)**.

l = ...

m = ...

(g) It is suggested that m and l are related by the equation

$$m^2 = kl^3$$

where k is a constant.

By calculating values of k, explain whether your results support this relationship.

.....

.....

.....

.....

© UCLES 2009

(h) (i) State and explain four sources of error or limitations of the procedure in this experiment.

For Examiner's Use

1. .....

.....

2. .....

.....

3. .....

.....

4. .....

.....

(ii) Suggest and explain four improvements that could be made to this experiment. You may suggest the use of other apparatus or different procedures.

1. .....

.....

2. .....

.....

3. .....

.....

4. .....

.....

© UCLES 2009

BLANK PAGE

BLANK PAGE

Permission to reproduce items where third-party owned material protected by copyright is included has been sought and cleared where possible. Every reasonable effort has been made by the publisher (UCLES) to trace copyright holders, but if any items requiring clearance have unwittingly been included, the publisher will be pleased to make amends at the earliest possible opportunity.

University of Cambridge International Examinations is part of the Cambridge Assessment Group. Cambridge Assessment is the brand name of University of Cambridge Local Examinations Syndicate (UCLES), which is itself a department of the University of Cambridge.